KB2631DLTSO
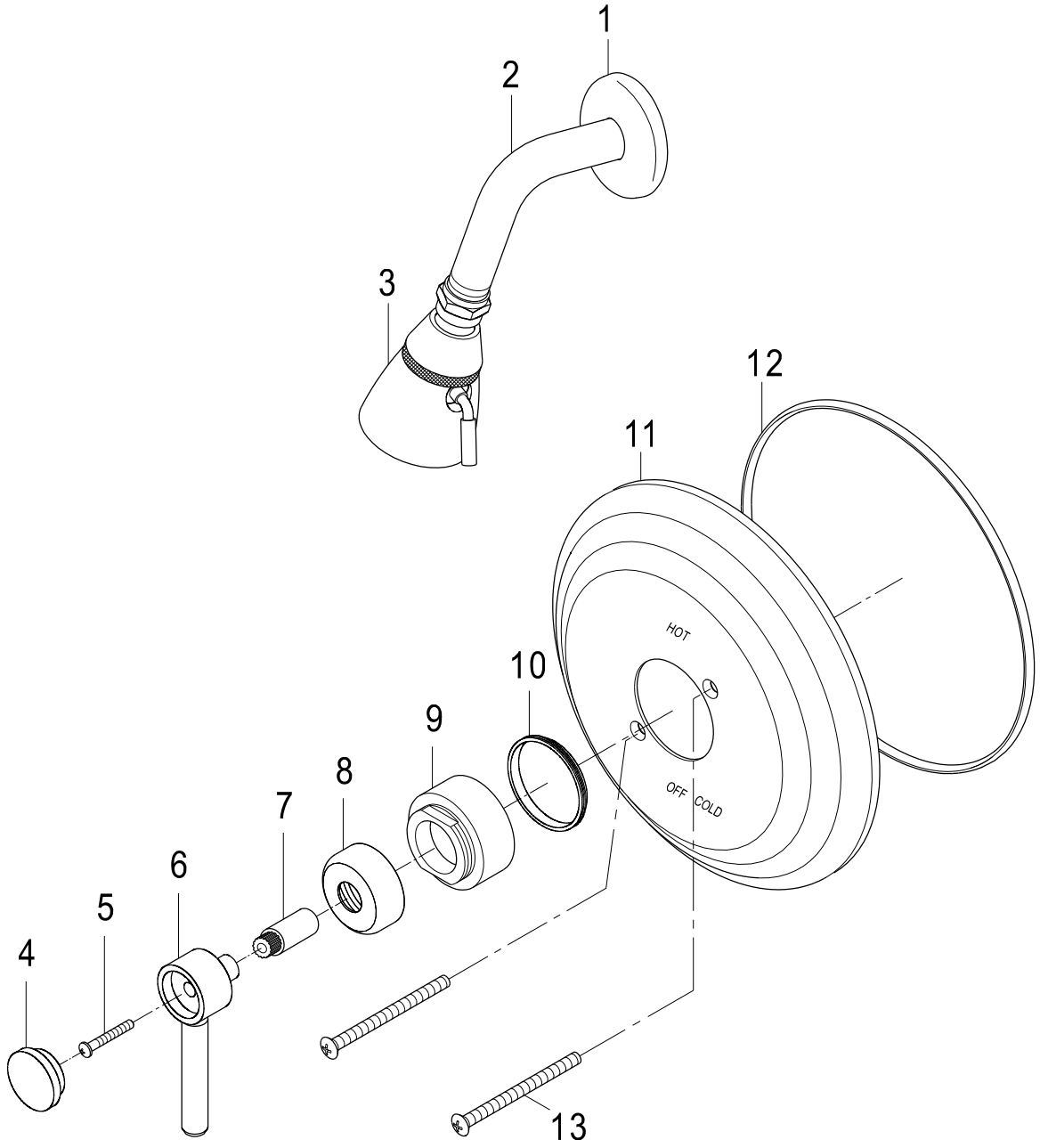
Single Handle Pressure Balanced Tub & Shower Faucet, Trim Only, Shower Only